* DIGITAL FILE 27 Aug 2002

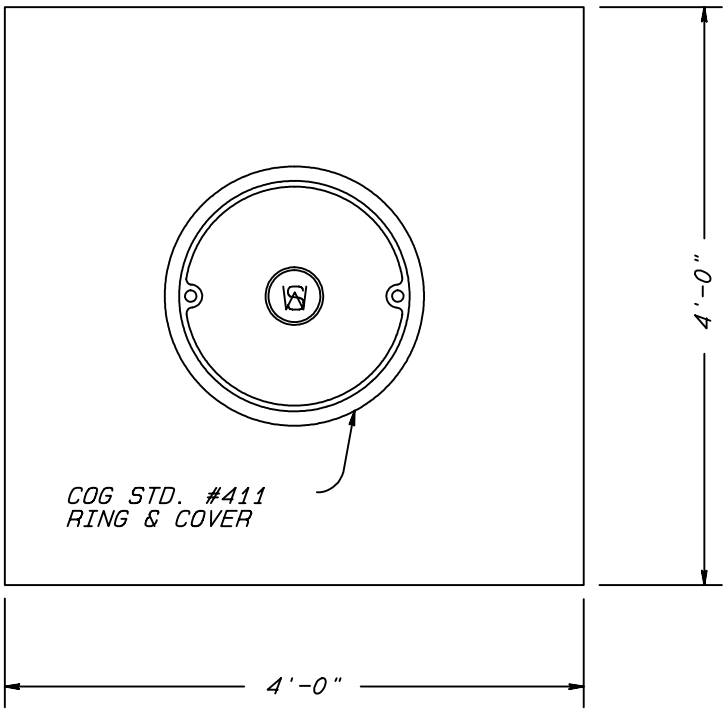


PLAN

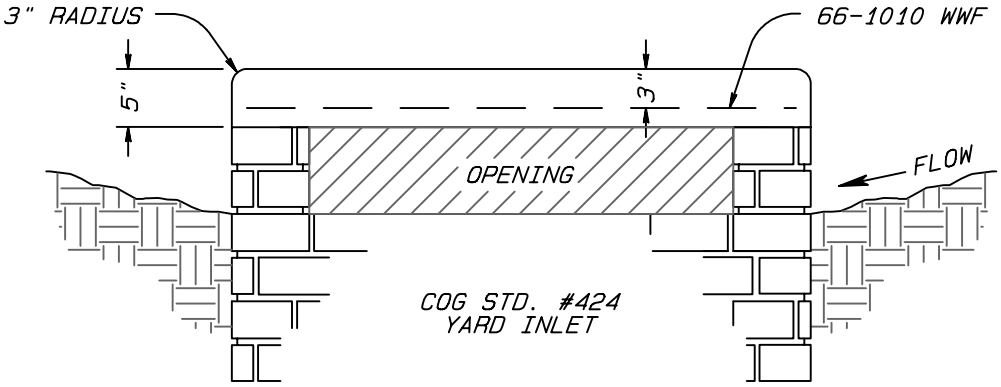


SECTION

NOTES:

CONCRETE SHALL BE CLASS A, 3000 PSI.

TOP SHALL HAVE SMOOTH FINISH.

G:\Exchange\Standards\Roadway\COG425.pro

| CITY OF GREENSBORO | | |
|---|---|---|
| STANDARD 4' X 4' PRECAST CONCRETE YARD INLET COVER WITH RING & COVER | STD. NO. | REV. |
| | 425 | |