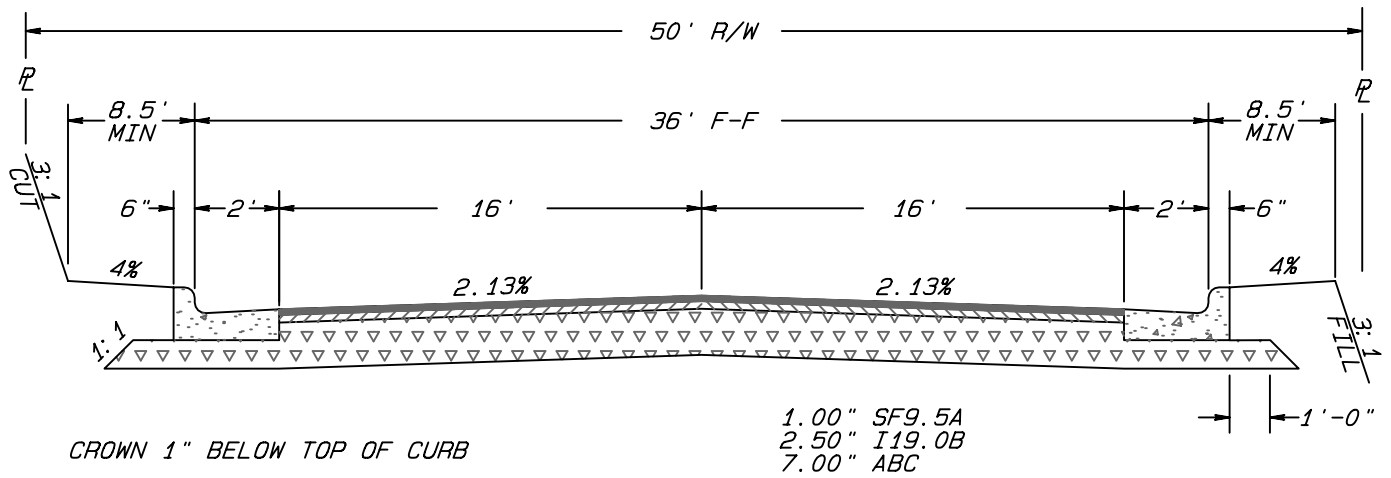

NORMAL CROWN SECTION

NOTE:

MAX. CURB ELEVATION DIFFERENTIAL FOR NORMAL CROWN SECTION IS 0.60'.

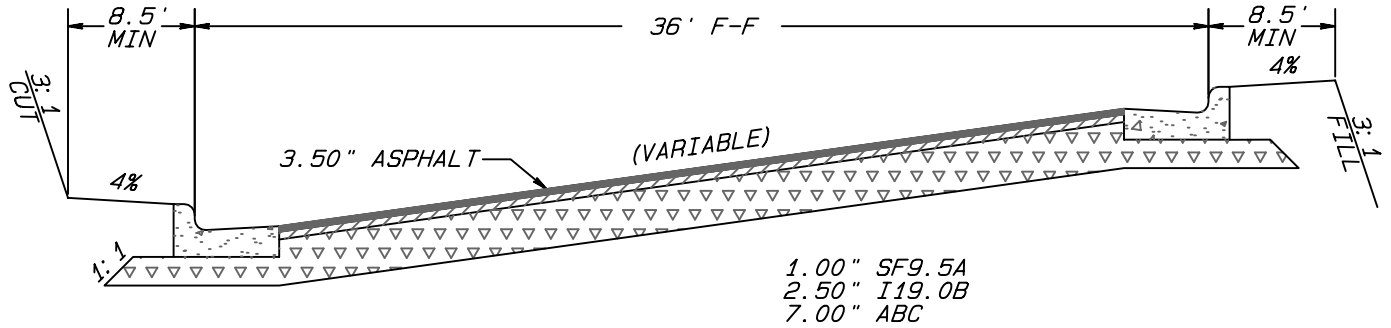

SUPERELEVATED SECTION

CURB ELEV. DIFF.	%GRADE
0.50'	1.56
0.60'	1.87
0.70'	2.19
0.80'	2.50
0.90'	2.81
1.00'	3.12
1.10'	3.44
1.20'	3.75

CITY OF GREENSBORO

TYPICAL STREET SECTION 36' FACE TO FACE	STD. NO.	REV.
	605	06-88 03-04 08-02 06-04 03-03

* DIGITAL FILE 1 Jun 2004
G:\Exchange\Standards\WORKING FILES\UPDATES JUNE 2004\COG605.pro