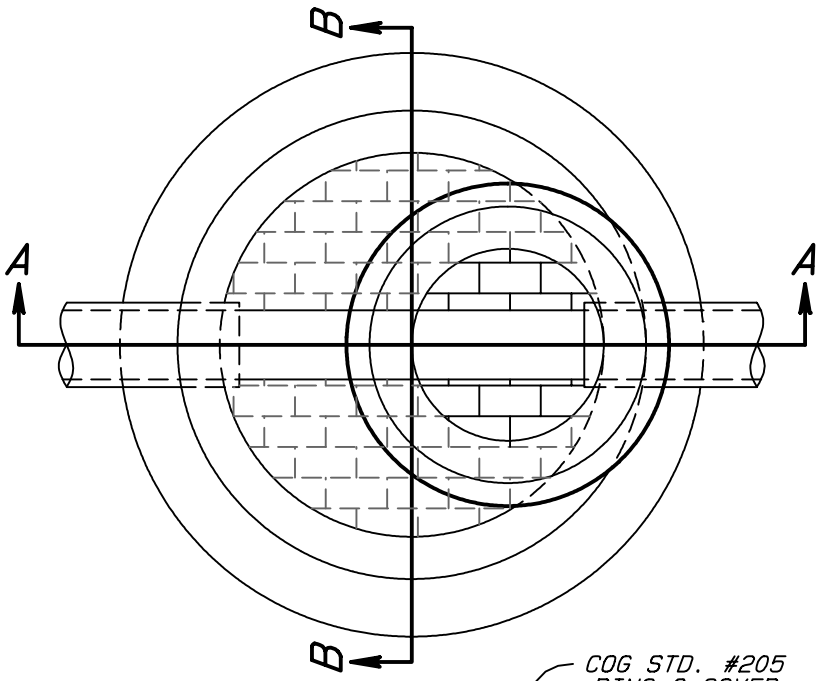

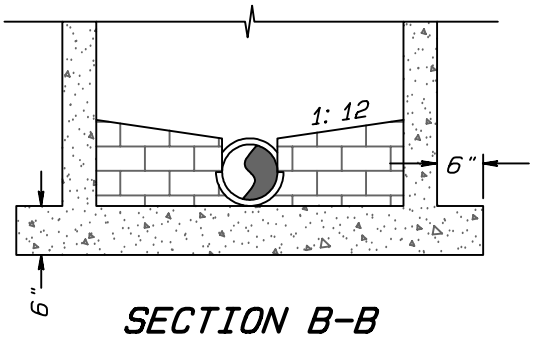

SECTION B-B

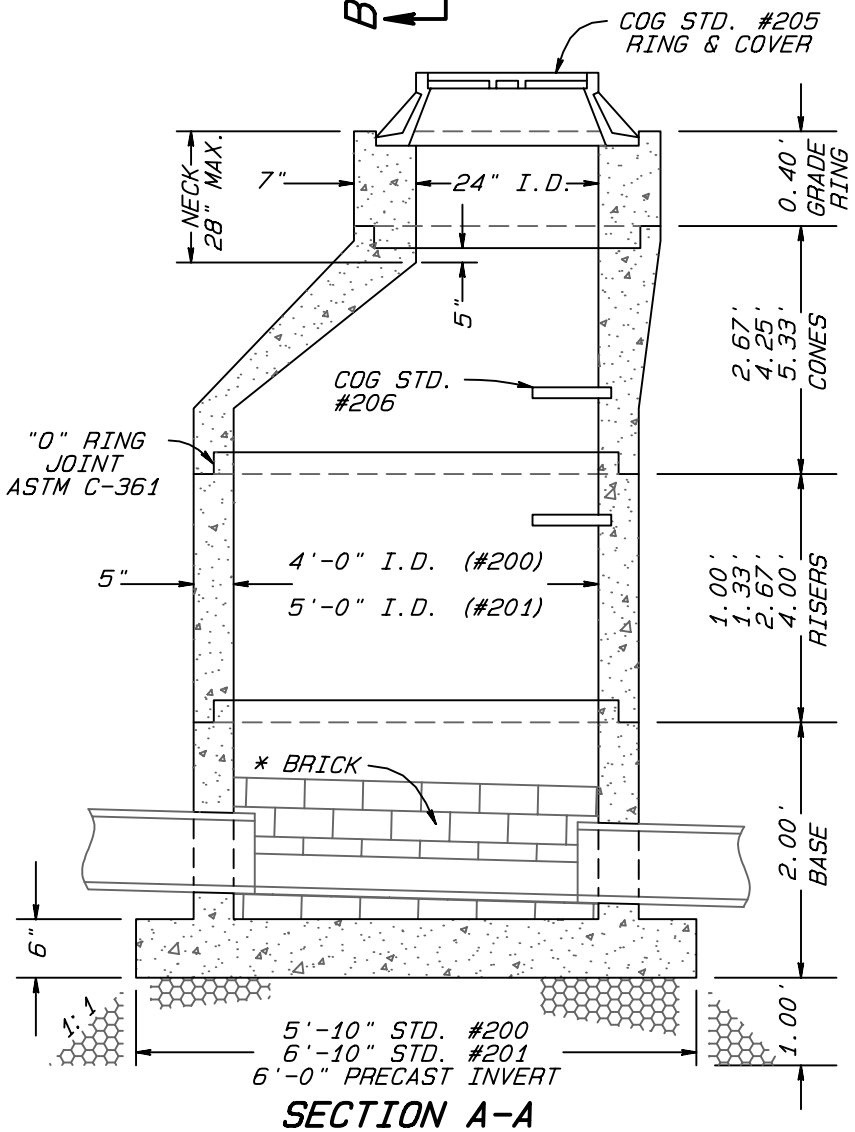

SECTION A-A

NOTES:

ON NEW INSTALLATION A MAX. OF TWO GRADE RINGS SHALL BE USED.

CONCRETE SHALL BE CLASS AA, 4000 PSI AS PER ASTM C-478.

STEEL REINFORCING SHALL MEET ASTM C-185 (4' DIA) OR ASTM C-478 (5' DIA).

MANHOLES OVER 3'-6" IN DEPTH SHALL BE PROVIDED WITH STEPS 16" ON CENTERS STEPS SHALL BE IN ACCORDANCE W/ COG STD. #206.

MANHOLES
(MAX. PIPE O.D.)

MH DIA	45° DEFL	90° DEFL
4'	31-1/2"	25"
5'	42"	32"
6'	51"	38"

* PRECAST INVERT (OPTIONAL)

CITY OF GREENSBORO

STANDARD 4' I.D. & 5' I.D. ECCENTRIC PRECAST CONCRETE SANITARY MANHOLE WITH EXPANDED BASE	STD. NO.	REV.
	200 / 201	05-88 03-98 11-93 08-02 09-95

* DIGITAL FILE 28 Aug 2002
G:\Exchange\Standards\Sewer\COG200-201.pro