* DIGITAL FILE 28 Aug 2002

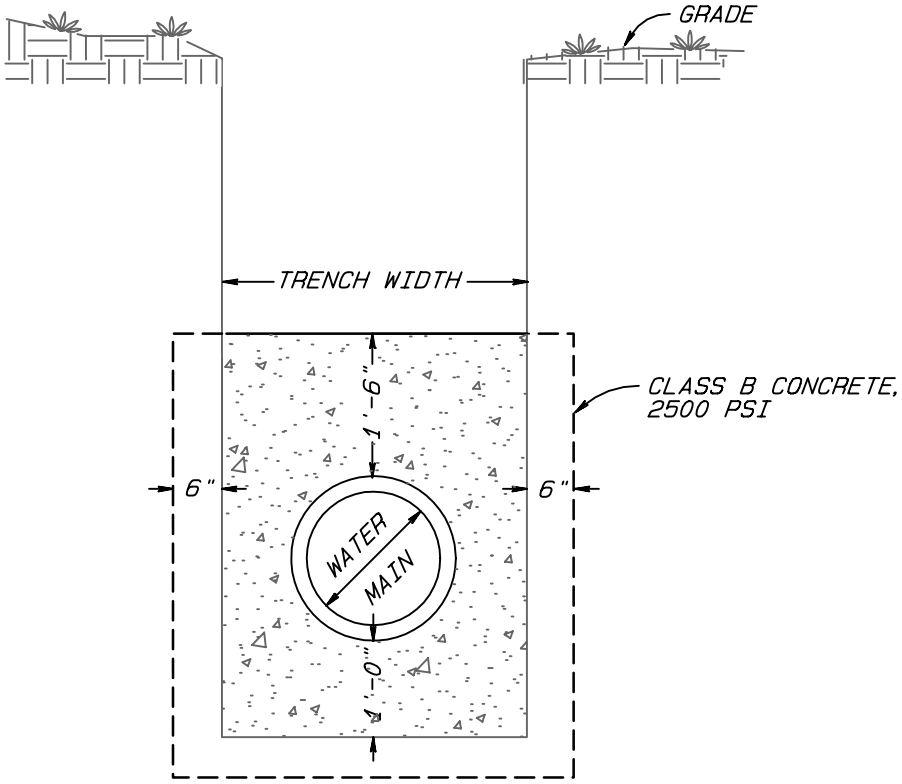

SECTION

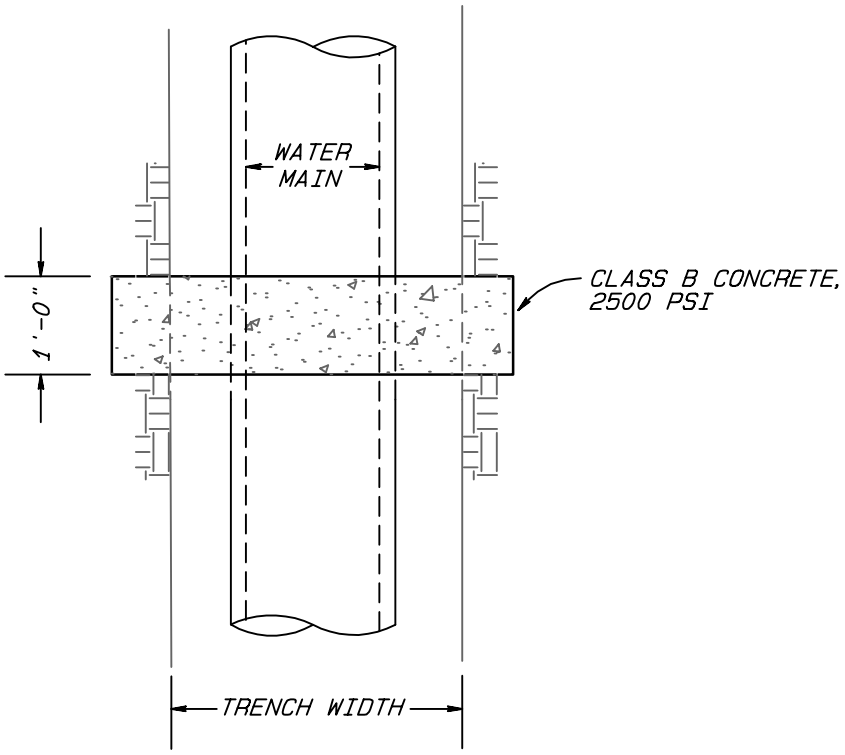

PLAN

CITY OF GREENSBORO		
STANDARD ANTI-SEEP PIPE COLLAR FOR WATER LINES	STD. NO.	REV.
	117	

G:\Exchange\Standards\Water\COG117.pro