* DIGITAL FILE 28 Aug 2002

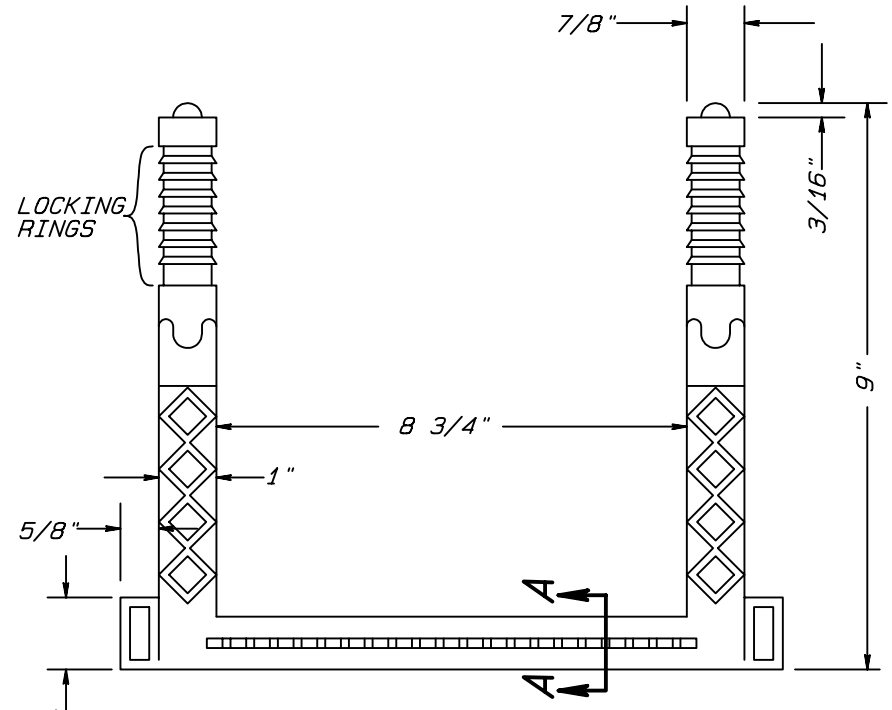

PLAN

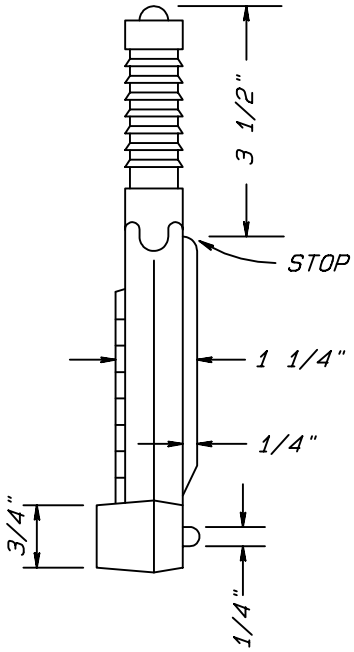

SIDE ELEVATION
COMPOSITE

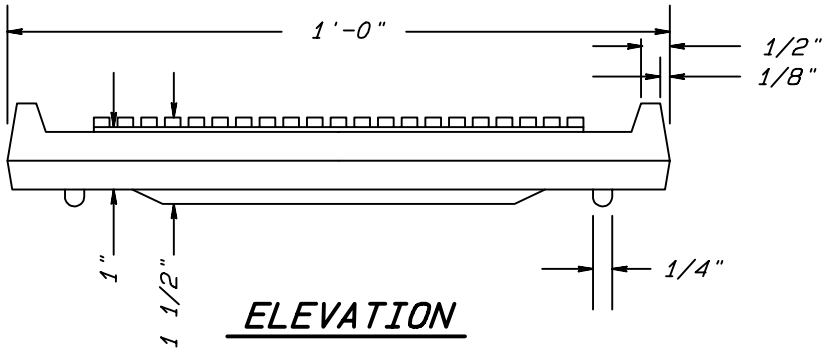

ELEVATION

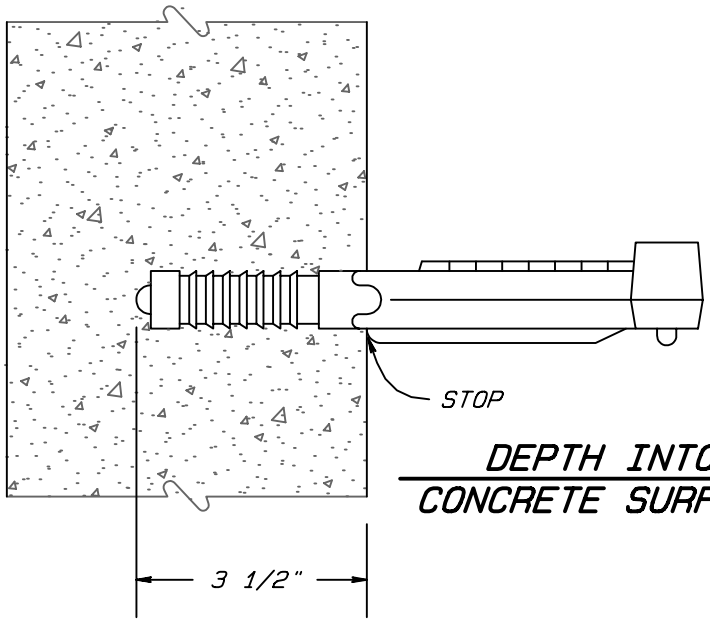

DEPTH INTO
CONCRETE SURFACE

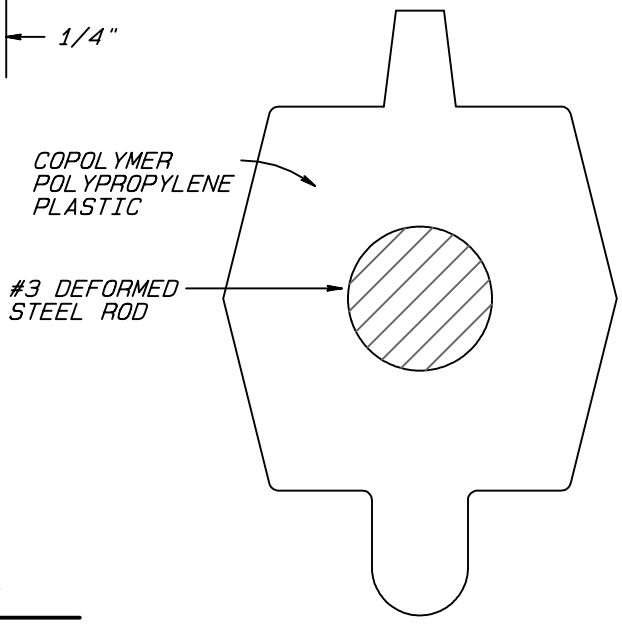

SECTION A-A

CITY OF GREENSBORO

STANDARD MANHOLE STEP FOR PRECAST CONCRETE MANHOLE	STD. NO.	REV.
	206	

G:\Exchange\Standards\Sewer\C0G206.pro