* DIGITAL FILE 28 Aug 2002

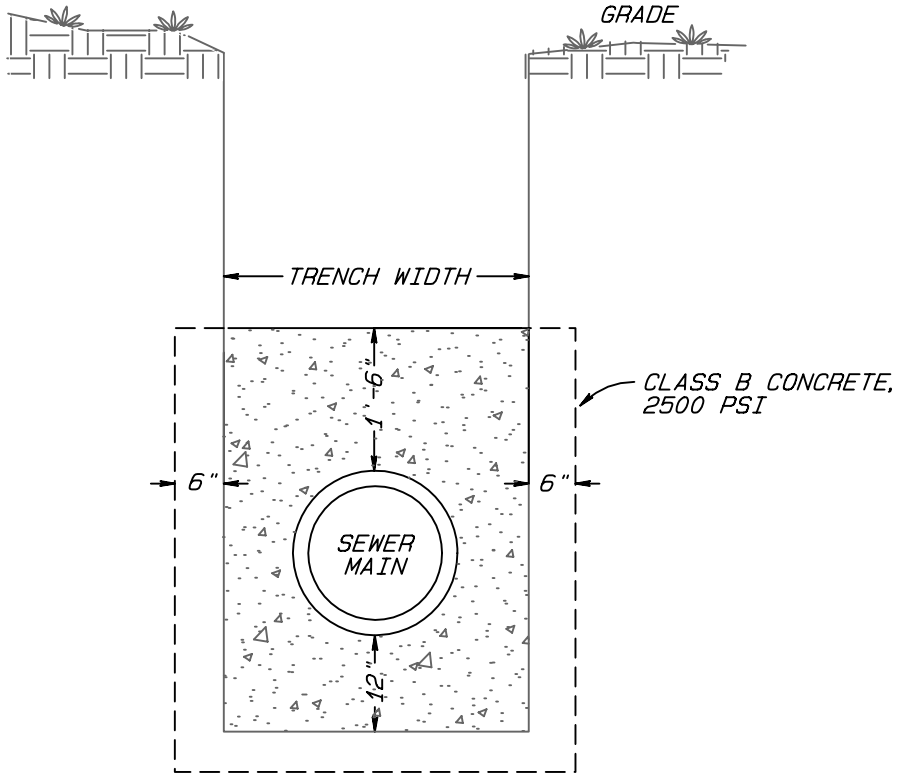

SECTION

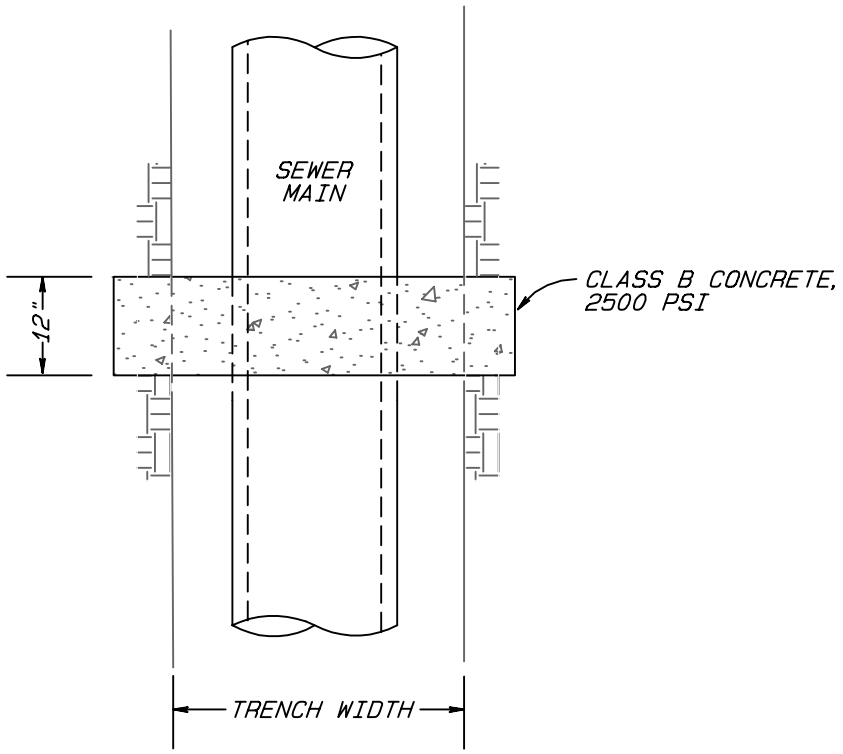

PLAN

CITY OF GREENSBORO		
STANDARD ANTI-SEEP PIPE COLLAR FOR SEWER LINES	STD. NO.	REV.
	219	

G:\Exchange\Standards\Sewer\COG219.pro