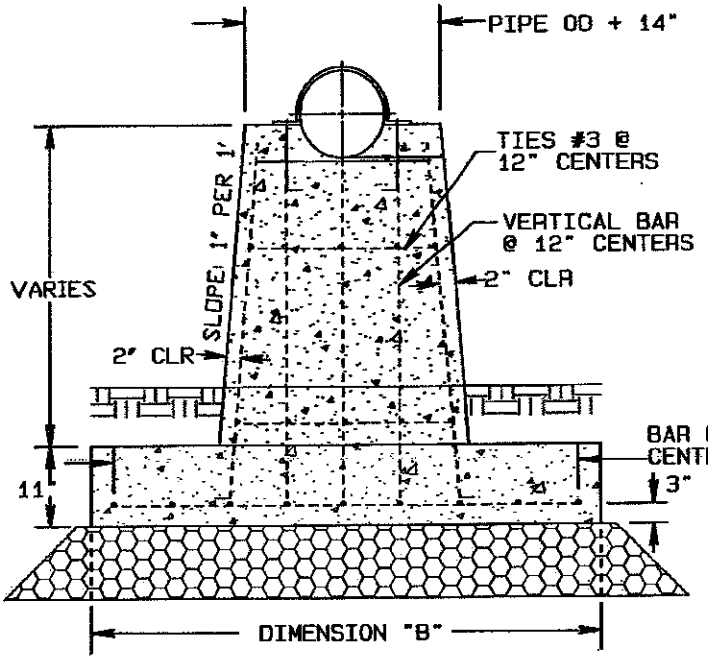

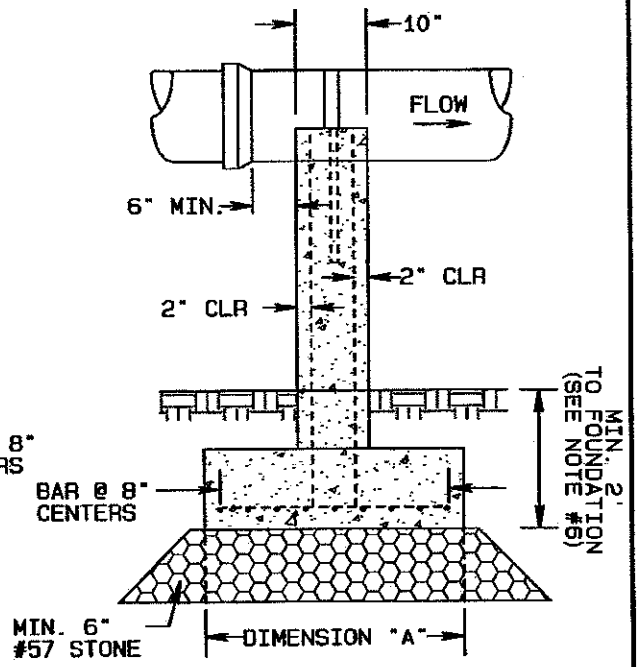

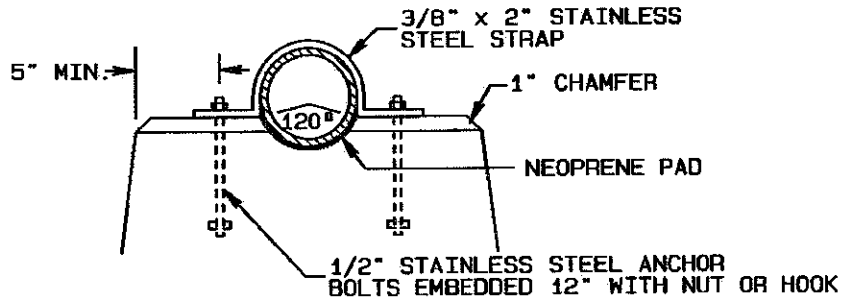

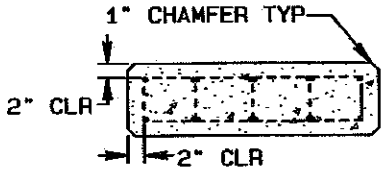

FOOTING DIMENSIONS					
PIPE SIZE (IN)	PIER HEIGHT (FT) 0-3	3-10	10-15	15-20	DIMENSION
4-6	2'-4"	3'-0"	4'-0"	5'-0"	A
	5'-0"	5'-6"	6'-0"	6'-6"	B
8-10	2'-4"	3'-0"	4'-0"	5'-0"	A
	5'-6"	6'-0"	6'-6"	7'-0"	B
12-18	2'-4"	3'-0"	4'-0"	5'-0"	A
	6'-0"	6'-6"	7'-0"	7'-6"	B

PIER HEIGHT (FT)	0-10	10-15	15-20
REINFORCING BAR SIZE	4	5	6

NOTES:

1. *DRAWINGS ARE NOT TO SCALE*
2. *REBAR BENDS NOT TO BE BENT BY HEAT*
3. *ALL CONCRETE TO BE AIR ENTRAINED CLASS 'A'.*
4. *1/8" TO 1/2" NEOPRENE PAD BETWEEN PIPE AND CONCRETE*
5. *ALL HARDWARE TO BE STAINLESS STEEL*
6. *FOUNDATION SOIL SHALL HAVE A MINIMUM SOIL BEARING PRESSURE OF 2000 PSF.*
7. *WHERE SHALLOW ROCK IS FOUND TO EXIST, PIN FOOTING TO ROCK BY DRILLING & EPOXYING DOWELS INTO THE ROCK.*
8. *ALL PIPE THAT IS TO BE SUPPORTED ON A PIER SHALL BE RESTRAINED JOINT (U.S. PIPE - MJ HARNESS-LOK, GRIFFIN PIPE - MECH-LOK OR PREAPPROVED EQUIVALENT).*
9. *ALL PIERS SHALL BE DESIGNED AND SUBMITTED (ALONG WITH DOCUMENTATION SHOWING DESIGN PARAMETERS, ASSUMPTIONS, AND SAFETY FACTORS USED TO RESIST THE FORCES ACTING ON THE PIER/PIPE SYSTEM) TO WATER RESOURCES DEPARTMENT AS PART OF THE PLAN REVIEW PROCESS. ALL PIER DESIGNS MUST BE SIGNED AND SEALED BY A REGISTERED NORTH CAROLINA PROFESSIONAL ENGINEER.*
10. *LOCATION OF ALL JOINTS TO BE DETERMINED BY THE DESIGN ENGINEER. A DETAIL OF THE ENTIRE PIER SYSTEM PROFILE SHALL BE INCLUDED IN THE DESIGN SUBMITTAL AS PART OF THE PLAN REVIEW PROCESS.*

CITY OF GREENSBORO

PIER DETAIL (TYPICAL)	STD. NO.	REV.
	220	03/09 06/09 12/09

* DIGITAL FILE 27 Jan 2009
G:\CADD SOP\StdsInProcess\Typical Pier Detail.pro