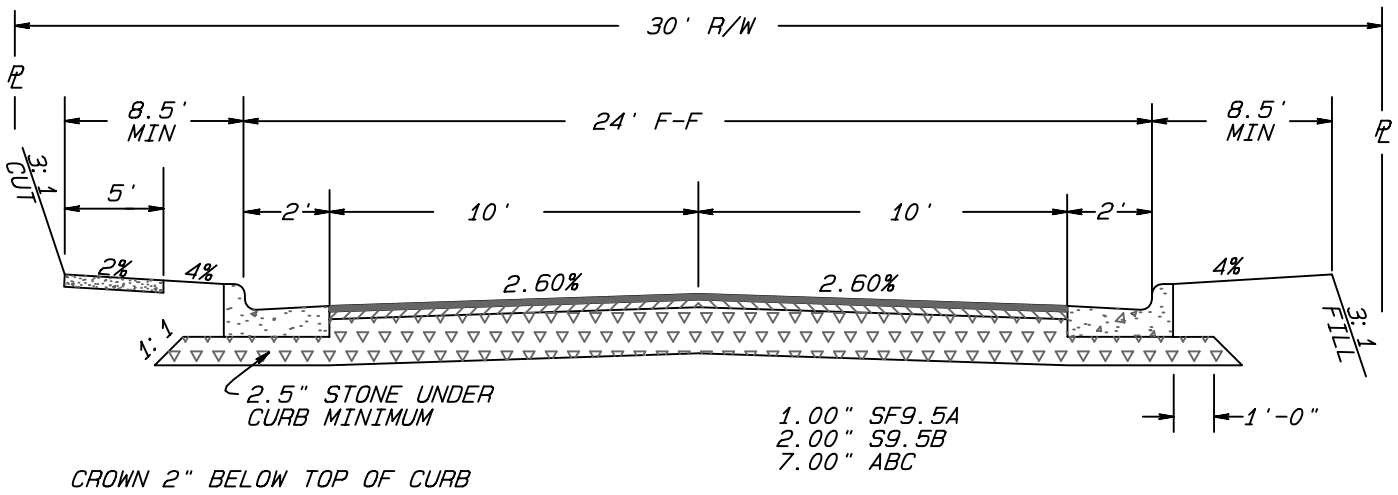

NORMAL CROWN SECTION

NOTE:

MAX. CURB ELEVATION DIFFERENTIAL FOR NORMAL CROWN SECTION IS 0.30'.

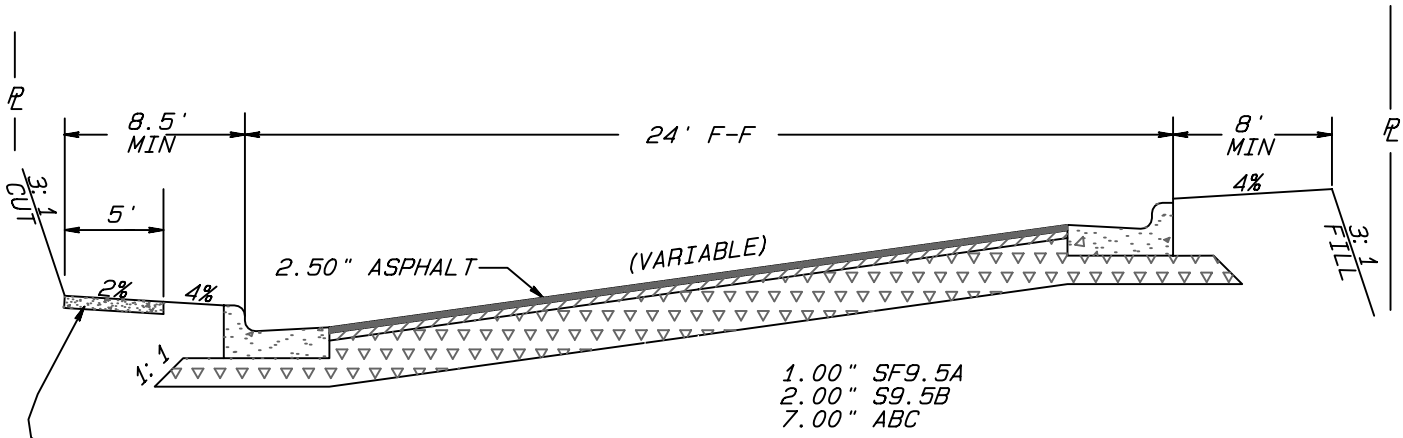

SUPERELEVATED SECTION

CURB ELEV. DIFF.	%GRADE
0.40'	2.00
0.50'	2.50
0.60'	3.00
0.70'	3.50
0.80'	4.00
0.90'	4.50
1.00'	5.00

CITY OF GREENSBORO

TYPICAL STREET SECTION 24' FACE TO FACE	STD. NO.	REV.
	600	03-03 06-04 09-03 04-05 03-04 06-05

* DIGITAL FILE 7 Oct 2005
G:\Exchange\Standards\WORKING FILES\Updates June 2005\COG600.pro