* DIGITAL FILE 27 Aug 2002

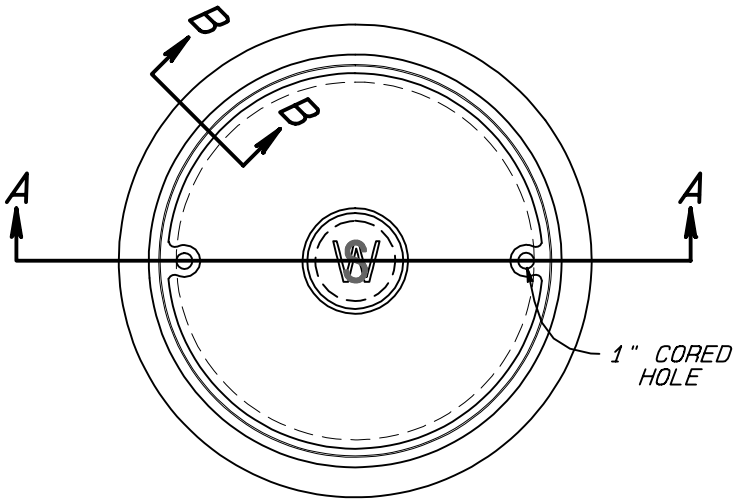

PLAN

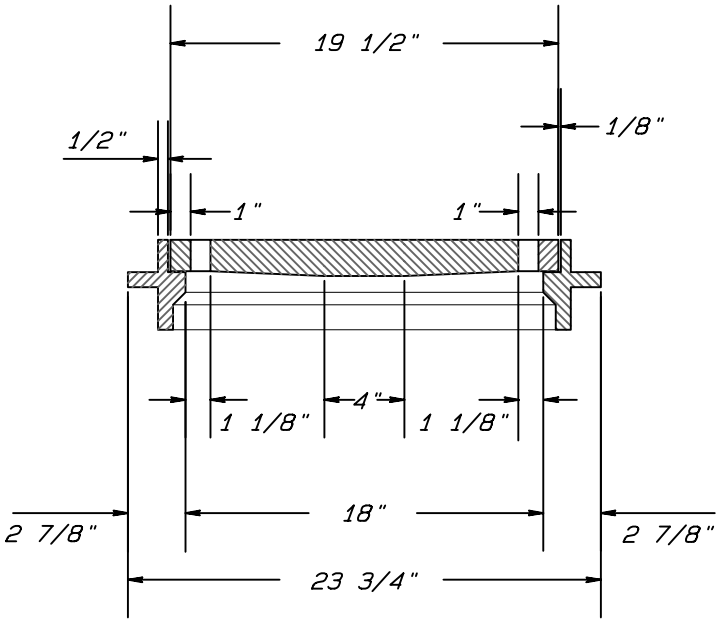

SECTION A-A

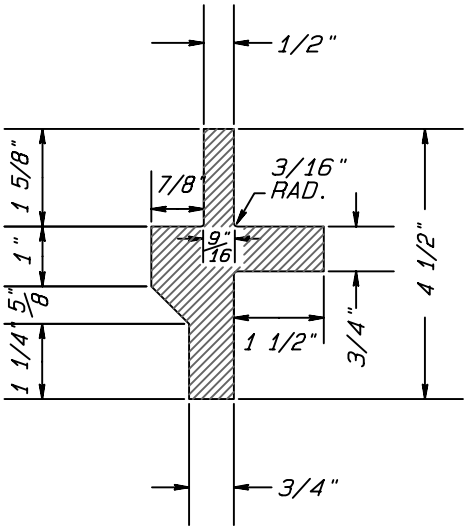

SECTION B-B

MH-RCR 47L
CAPITAL - 1662L
US FOUNDRY A5098
US FOUNDRY A5117

G:\Exchange\Standards\Roadway\CDG411.pro

CITY OF GREENSBORO		
STANDARD INLET RING AND COVER	STD. NO.	REV.
	411	03-97 06-99 10-97 03-01 03-98