* DIGITAL FILE 27 Aug 2002

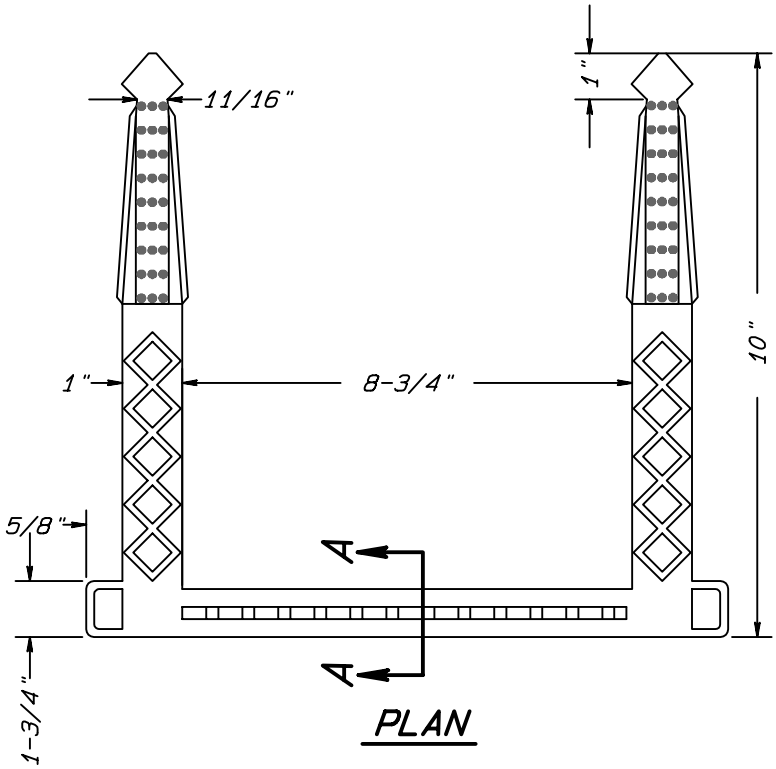

PLAN

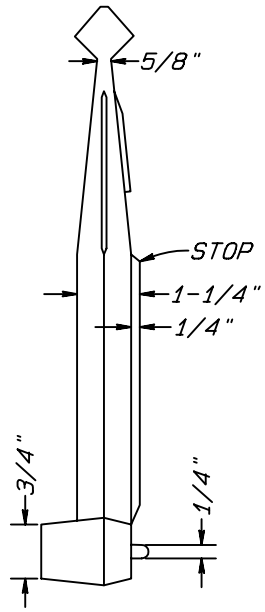

SIDE ELEVATION
COMPOSITE

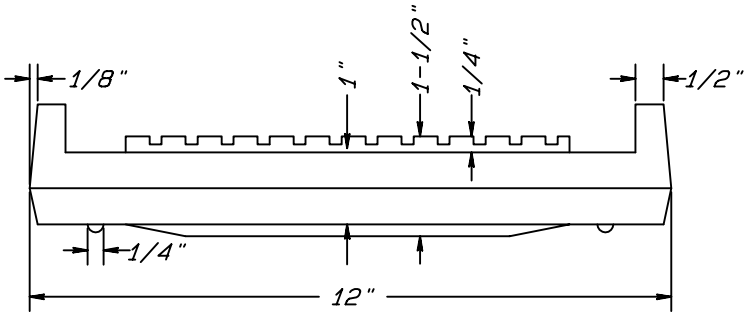

ELEVATION

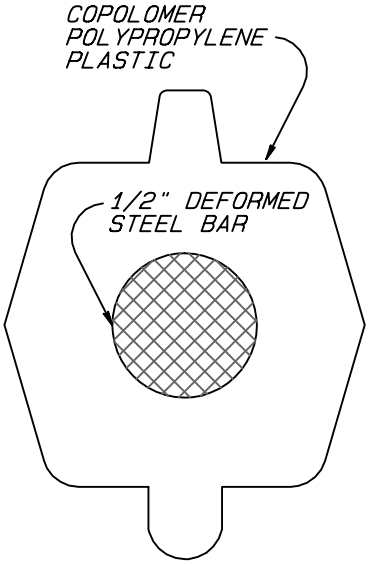

SECTION A-A

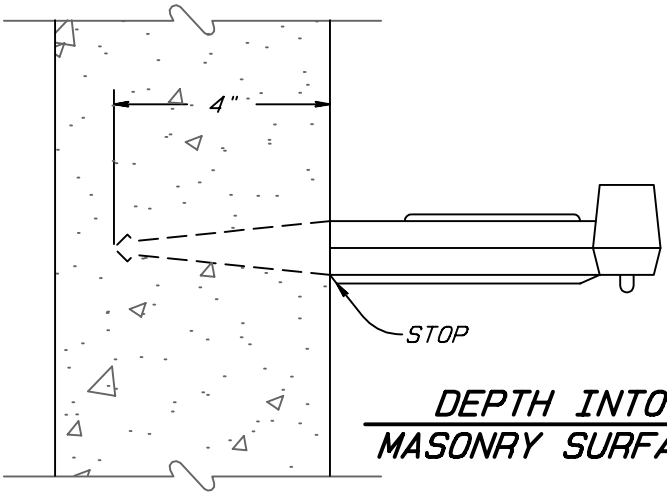

DEPTH INTO
MASONRY SURFACE

CITY OF GREENSBORO

STANDARD PLASTIC STEP FOR BRICK MASONRY STRUCTURES	STD. NO.	REV.
	414	03-01

G:\Exchange\Standards\Roadway\COG414.pro