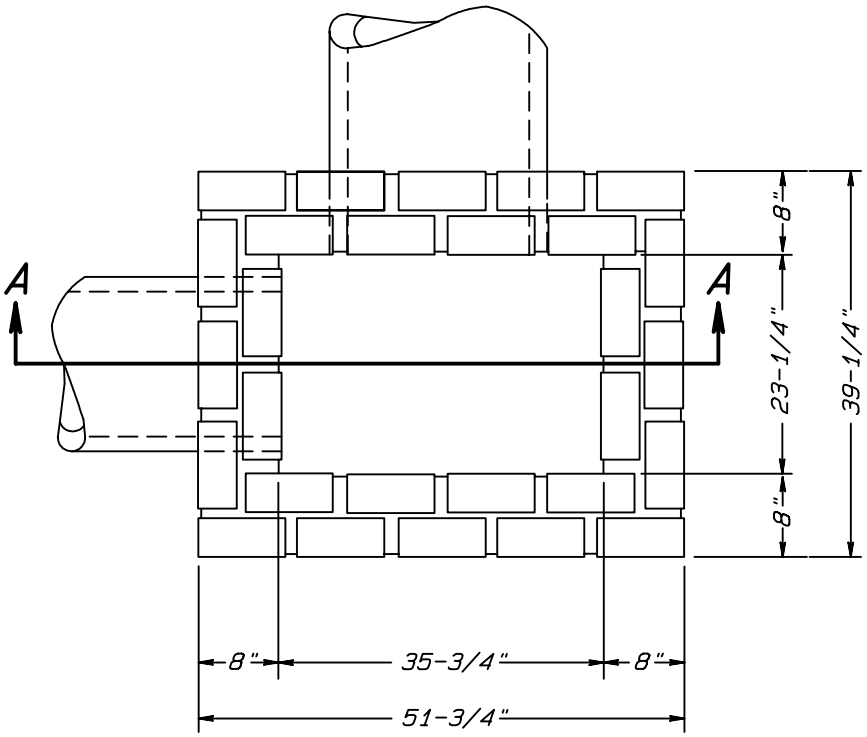

PLAN

NOTES:

BRICK MASONRY SHALL BE COMMON CLAY BRICK, JUMBO BRICK, OR CONCRETE BRICK.

CONCRETE BOTTOMS SHALL BE PAID AS BRICK MASONRY.

ALL MORTAR JOINTS ARE TO BE 1/2" + 1/8".

FOR DEPTHS OVER 3'-6" USE STEPS ON 16" CENTERS. STEPS SHALL BE IN ACCORDANCE WITH COG STD. #414.

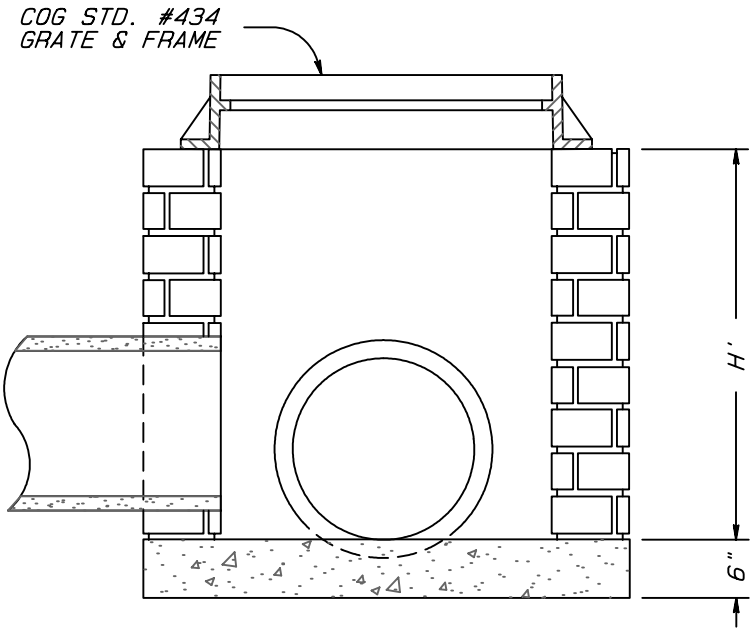

SECTION A-A

QUANTITIES	
BASE (C.Y.)	H' (PER FT. HEIGHT)
0.261	0.310 CY

DEDUCTIONS FOR ONE PIPE		
PIPE SIZE	C.M.P.	R.C.P.
12"	0.020	0.032
15"	0.031	0.047
18"	0.044	0.065
24"	0.078	0.122

CITY OF GREENSBORO

STANDARD BRICK MASONRY DROP INLET FOR 24" X 36" GRATE

STD. NO.	REV.
435	08-02

* DIGITAL FILE 27 Aug 2002
G:\Exchange\Standards\Roadway\COG435.pro