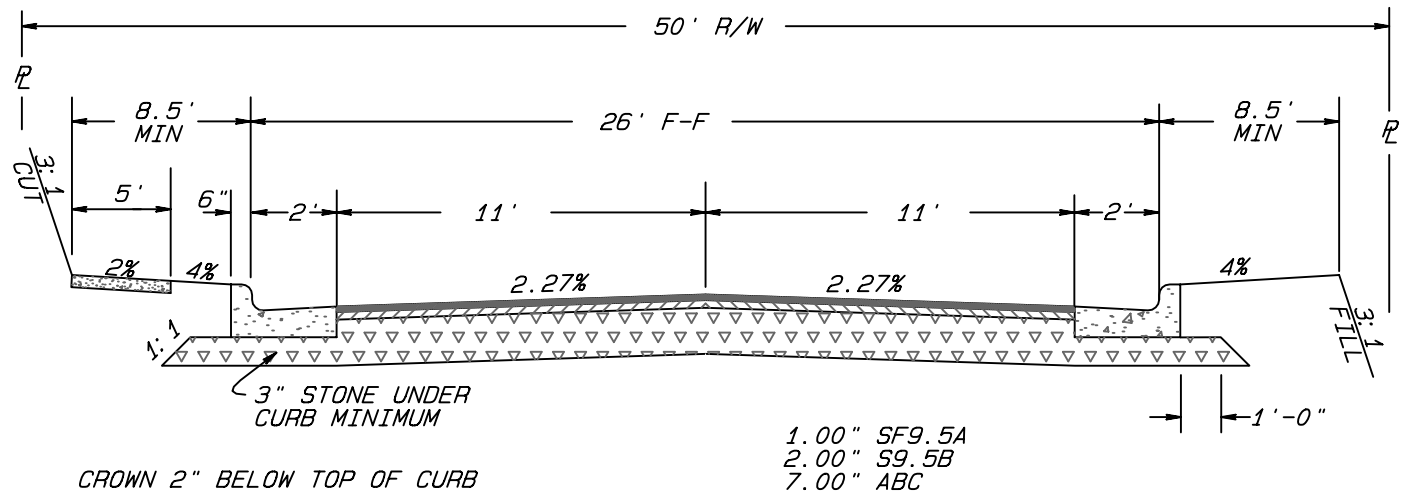

NORMAL CROWN SECTION

NOTE:

MAX. CURB ELEVATION DIFFERENTIAL FOR NORMAL CROWN SECTION IS 0.30'.

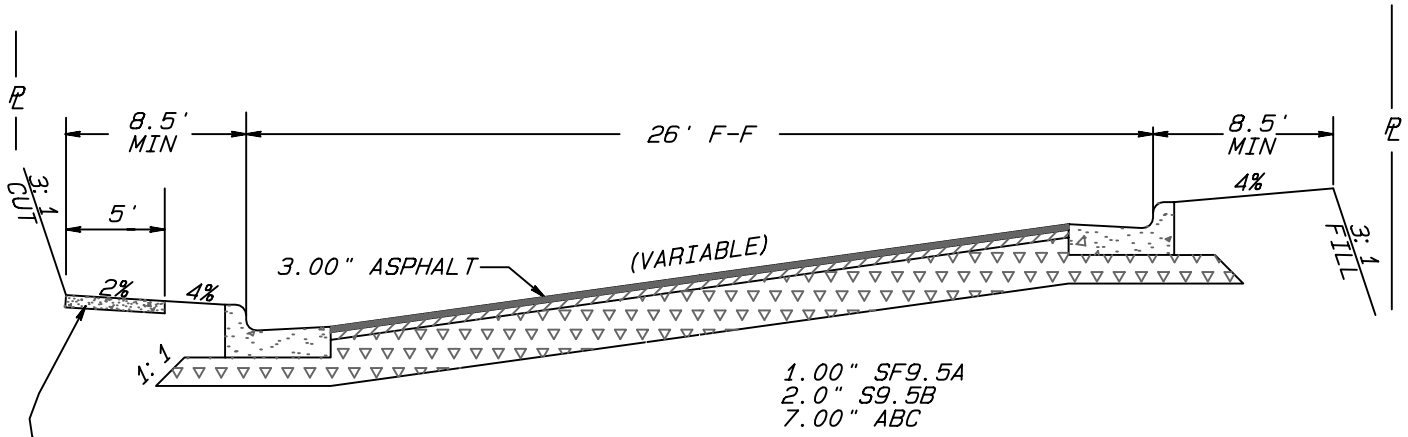

SUPERELEVATED SECTION

CURB ELEV. DIFF.	%GRADE
0.40'	1.82
0.50'	2.27
0.60'	2.73
0.70'	3.18
0.80'	3.64
0.90'	4.09
1.00'	4.55

CITY OF GREENSBORO

TYPICAL STREET SECTION 26' FACE TO FACE	STD. NO.	REV.
	601	08-02 03-04 03-03 06-04 09-03

* DIGITAL FILE 28 May 2004
G:\Exchange\Standards\WORKING FILES\UPDATES JUNE 2004\COG601.pro