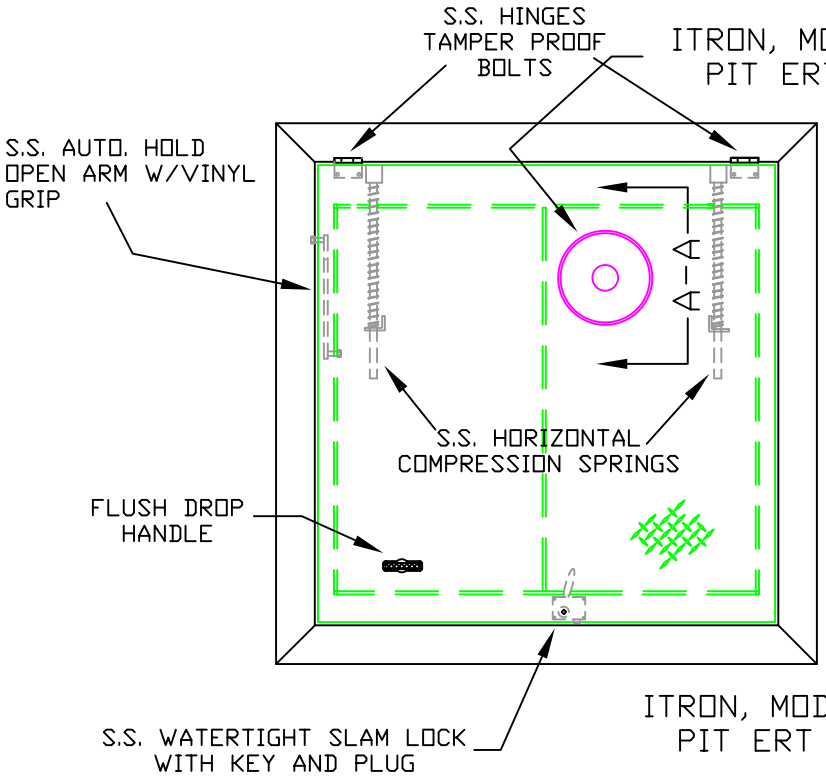

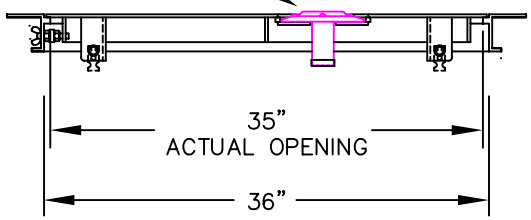

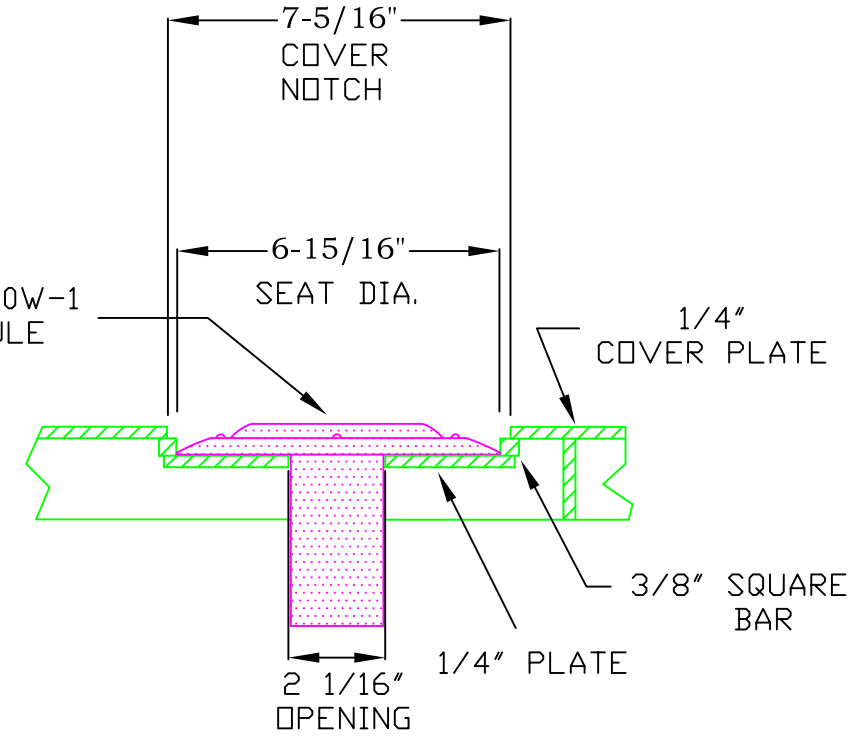

RECESSED SHELF DETAIL

SECTION A-A

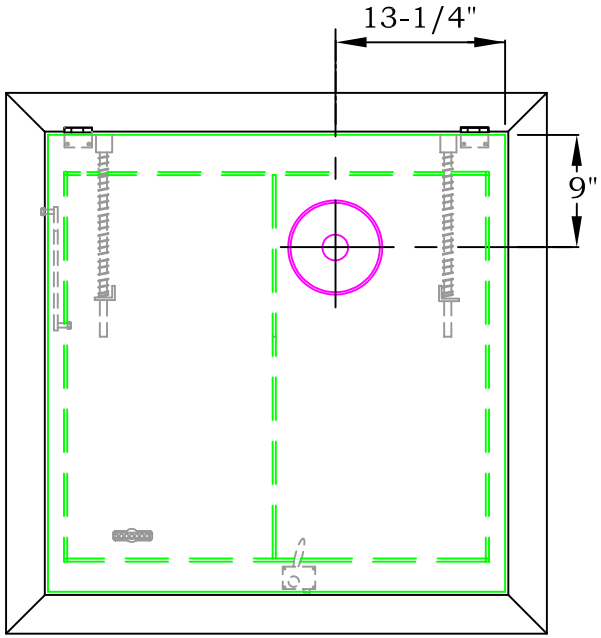

ACCESS DOORS SHALL BE APS 300 BY
U.S. FOUNDRY, OR APPROVED EQUAL.
SIZED FOR 36" X 36" CONCRETE OPENING.

GSO-1

REVISED
4-9-03

Meter Vault Access Door W/Recessed Pocket for Radio Transmitter Module (Single Register Turbine Meters)

City of Greensboro Water Resources Department