* DIGITAL FILE 27 Aug 2002

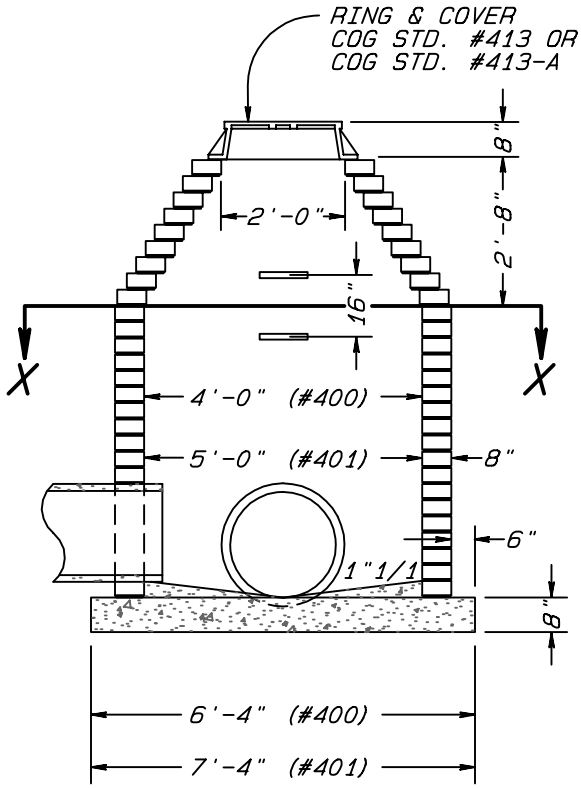

SECTION ON CENTERLINE

NOTES:

COG STD. #400 MANHOLE IS FOR 12" PIPE THRU 36" PIPE.

COG STD. #401 MANHOLE IS FOR PIPE OVER 36" DIAMETER.

ALL MORTAR JOINTS ARE TO BE 1/2"± 1/8".

CONCRETE IS TO BE CLASS B, 2500 PSI FOR BASE.

JUMBO BRICK WILL BE PERMITTED. CONCRETE BRICK OR 4" SOLID CONCRETE BLOCKS MAY BE USED IN LIEU OF CLAY BRICK.

MANHOLES OVER 3'-6" IN DEPTH SHALL BE PROVIDED WITH STEPS 16" ON CENTERS. STEPS SHALL BE IN ACCORDANCE WITH COG STD. #414.

FOR MANHOLES WITH A VERTICAL WALL DEPTH LESS THAN 12'-0", BRICK MASONRY WALL THICKNESS SHALL BE 8".

FOR MANHOLES OVER 12'-0" VERTICAL WALL DEPTH, BRICK MASONRY WALL THICKNESS SHALL BE 1'-0" BEGINNING AT 12'-0" DEPTH.

WHEN CONSTRUCTING THIS STRUCTURE OVER AN EXISTING PIPE LINE, SAW CUT AND REMOVE A SECTION OF PIPE EQUAL TO THE INSIDE DIAMETER OF THE STRUCTURE. POUR A NEW BOTTOM AS SHOWN AND CONSTRUCT THE NEW STRUCTURE. NEW STRUCTURES ARE NOT TO BE BUILT ON TOP OF THE PIPE.

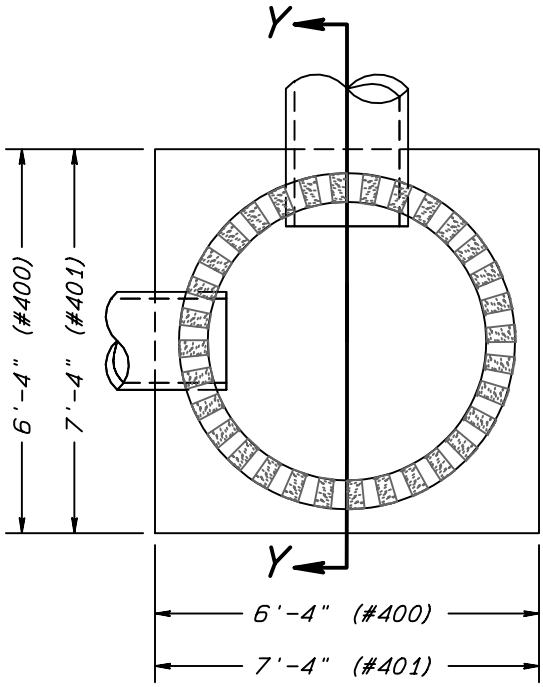

SECTION X-X

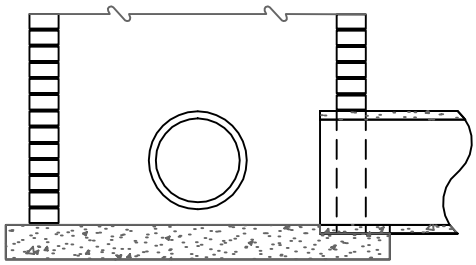

PART SECTION Y-Y

CITY OF GREENSBORO

STANDARD BRICK MASONRY STORM SEWER MANHOLE	STD. NO.	REV.
	400	09-95
	401	06-99
		08-02

G:\Exchange\Standards\Roadway\COG400-401.pro