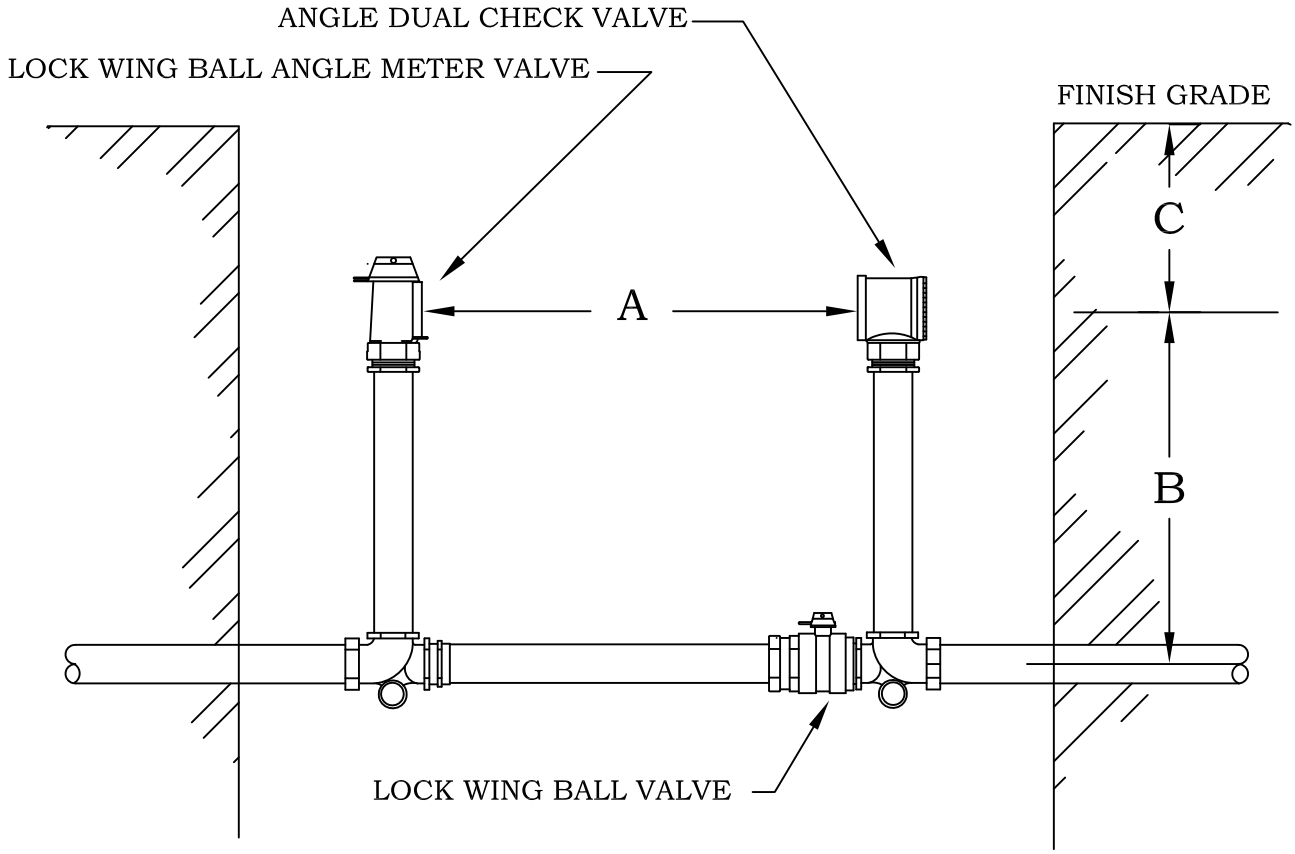

SETTER DIMENSIONS

	A	B	C
1 1/2" METER	13 1/4"	15"	10"
2" METER	17 1/4"	15"	10"

METER BOXES

USE 24" W x 36" L x 30" D
BOX & COVER
SEE **GSO-10**

APPROVED METER BOXES

- CDR / QUAZITE AS MFG. BY HUBBELL POWER SYSTEMS
- HIGHLINE PRODUCTS

APPROVED SETTERS

	MUELLER	FORD	A.Y. McDONALD	CAMBRIDGE
1 1/2"	B-2423-2-01	VBHH76-12B-11-66-NL	20B-612WDFF665	6020-615F6F6-UQNB
2"	B-2423-2-01	VBHH77-12B-11-77-NL	20B-712WDFF775	6020-715F7F7-UQNB

CITY OF GREENSBORO WATER RESOURCES DEPARTMENT	STANDARD 1 1/2" & 2" METER INSTALLATIONS	**GSO-4** REVISED 4-16-15