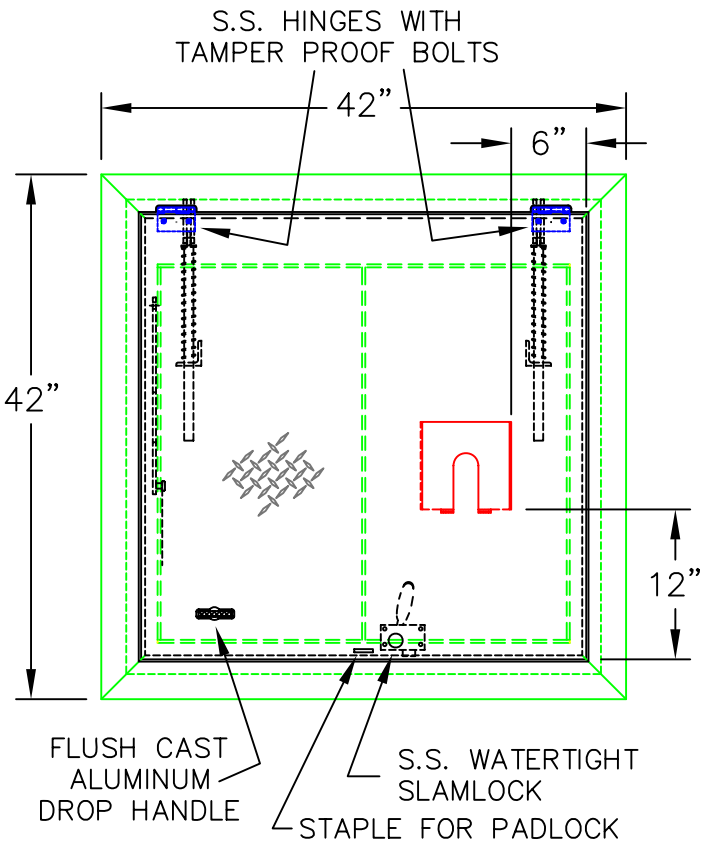

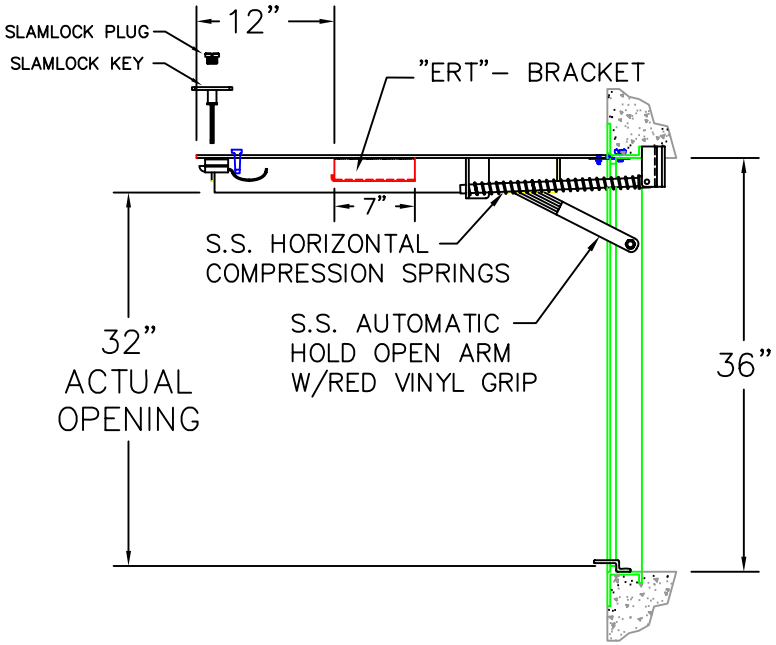

BRACKET FOR ITRON 60W
RADIO TRANSMITTER MODULE

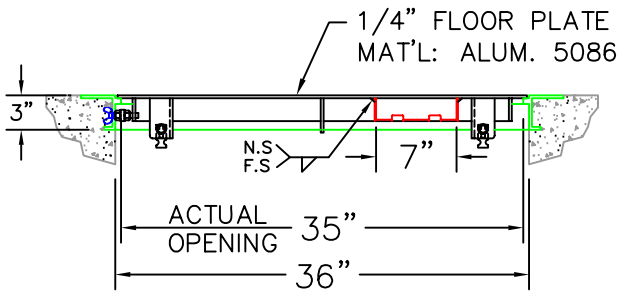

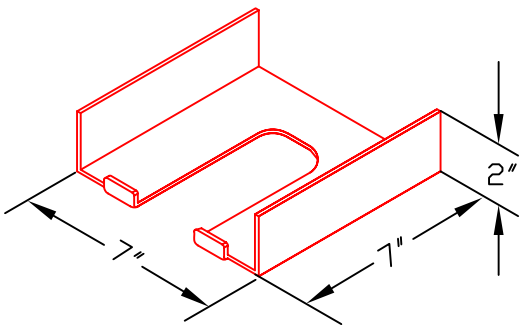

ISOMETRIC VIEW

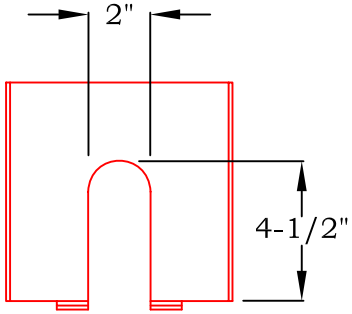

PLAN VIEW

ACCESS DOORS SHALL BE APS 300 BY
U.S. FOUNDRY, OR APPROVED EQUAL
SIZED FOR 36″ X 36″ CONCRETE OPENING.

GSO-1

REVISED
10-18-06

Meter Vault Access Door W/Bracket for Radio Transmitter Module (Single Register Turbine Meters)

City of Greensboro Water Resources Department