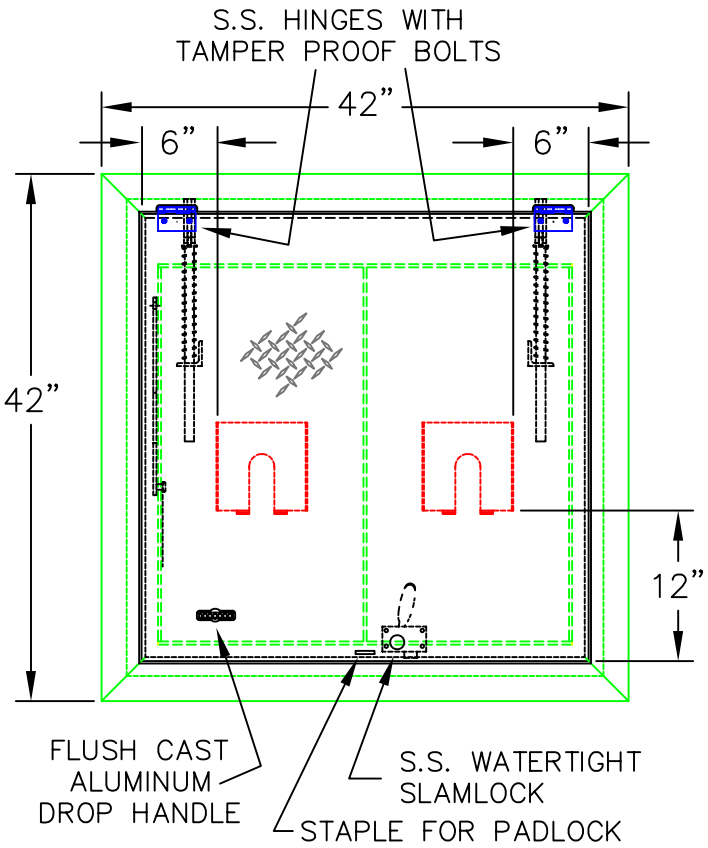

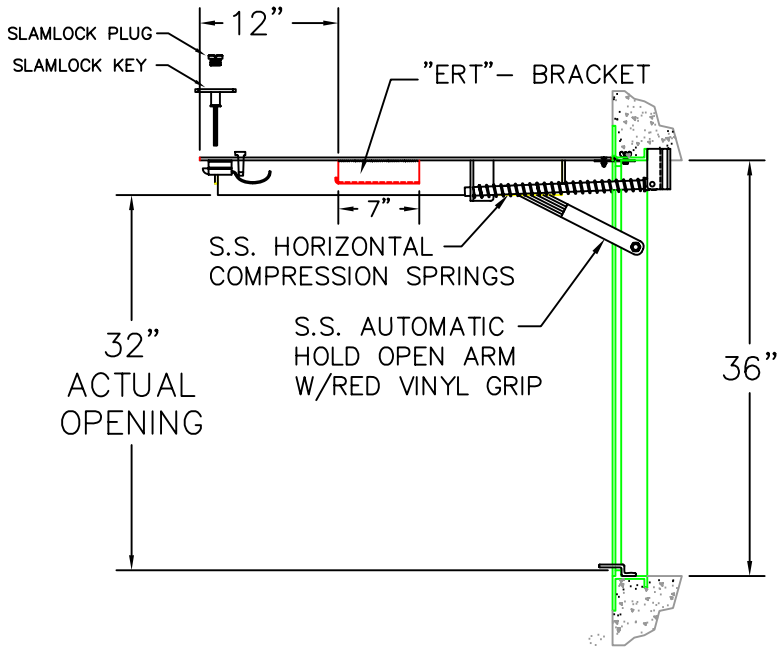

BRACKET FOR ITRON 60W
RADIO TRANSMITTER MODULE

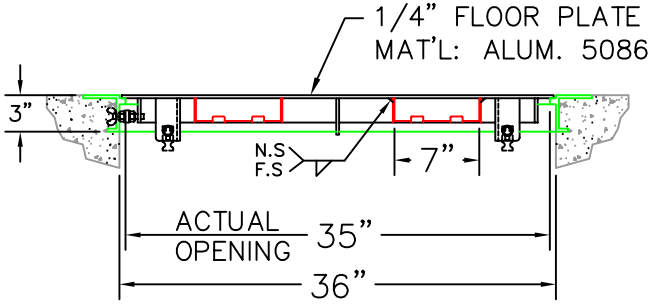

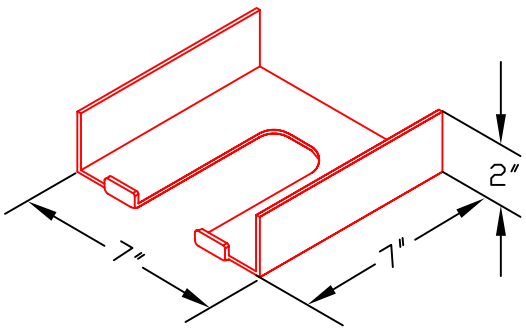

ISOMETRIC VIEW

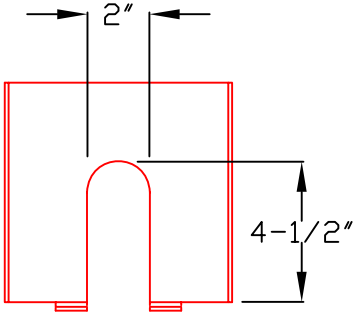

PLAN VIEW

ACCESS DOORS SHALL BE APS 300 BY
U.S. FOUNDRY, OR APPROVED EQUAL
SIZED FOR 36" X 36" CONCRETE OPENING.

GSO-2

REVISED
10-18-06

Meter Vault Access Door W/Brackets for Radio Transmitter Modules (Two Register Compound & FM Meters)

City of Greensboro Water Resources Department